# LightBo

## 8mm Through Hole Lamps

LBL080

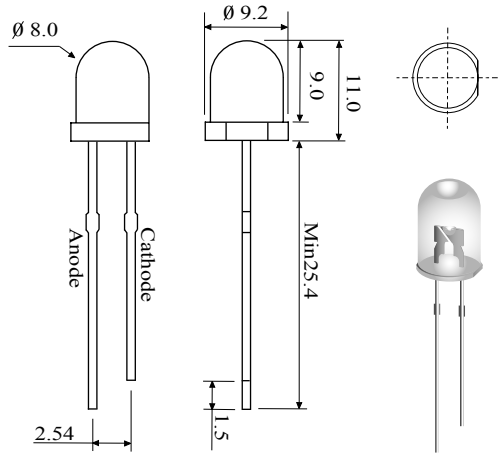


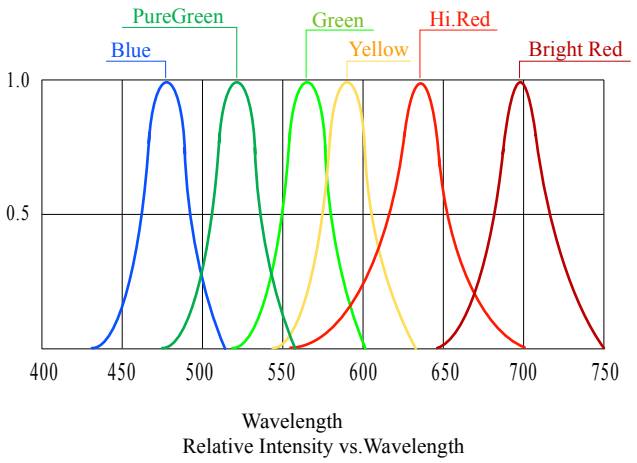


| Part no. | Colour | Wave Length | Lens Color ( x ) | Luminous Intensity (mcd) | Forward Voltage ( V ) | Forward Current ( mA ) | 0° |
|---|---|---|---|---|---|---|---|
| LBL080DxI | Red | 660 | | 500 | 2.15 | 20 | 40 |
| LBL080CxI | Red | 660 | | 1500 | 2.15 | 20 | 40 |
| LBL080AxI-S | Red | 623 | | 2500 | 2.15 | 20 | 40 |
| LBL080AxI-U | Red | 660 | | 5800 | 2.15 | 20 | 40 |
| LBL080AxI-T | Red | 623 | | 7800 | 2.15 | 20 | 40 |
| LBL080KxI | Green | 568 | | 500 | 2.15 | 20 | 40 |
| LBL080JxI | Green | 568 | | 1500 | 2.15 | 20 | 40 |
| LBL080JxI-S | Green | 568 | | 2500 | 2.15 | 20 | 40 |
| LBL080JxI-U | Green | 568 | | 6000 | 2.30 | 20 | 40 |
| LBL080IxI | Yellow | 589 | | 1300 | 2.15 | 20 | 40 |
| LBL080IxI-S | Yellow | 589 | | 2500 | 2.15 | 20 | 40 |
| LBL080IxI-U | Yellow | 589 | | 4500 | 2.15 | 20 | 40 |
| LBL080IxI-T | Yellow | 589 | W- White | 7500 | 2.15 | 20 | 40 |
| LBL080FxI | Orange | 605 | D - Diffused | 1500 | 2.30 | 20 | 40 |
| LBL080FxI-S | Orange | 605 | C - Water Clear | 2500 | 2.30 | 20 | 40 |
| LBL080FxI-U | Orange | 605 | T - Transparent | 3500 | 2.30 | 20 | 40 |
| LBL080BGxI | Blue / Green | 510 | | 3000 | 3.60 | 20 | 40 |
| LBL080BGxI-U | Blue / Green | 510 | | 4500 | 3.60 | 20 | 40 |
| LBL080BLxI | Blue | 470 | | 500 | 3.60 | 20 | 40 |
| LBL080BHxI | Blue | 470 | | 1600 | 3.60 | 20 | 40 |
| LBL080BUxI | Blue | 470 | | 3500 | 3.60 | 20 | 40 |
| LBL080PGxI | Pure Green | 525 | | 2500 | 3.60 | 20 | 40 |
| LBL080PGxI-S | Pure Green | 525 | | 4000 | 3.60 | 20 | 40 |
| LBL080PGxI-U | Pure Green | 525 | | 5500 | 3.60 | 20 | 40 |
| LBL080WHxI | White | ---- | | 1300 | 3.60 | 20 | 40 |
| LBL080WUxI | White | ---- | | 5200 | 3.60 | 20 | 40 |
| | | | | | | | |
| | | | | | | | |