LightBo

5mm Through Hole Lamps

LBL051

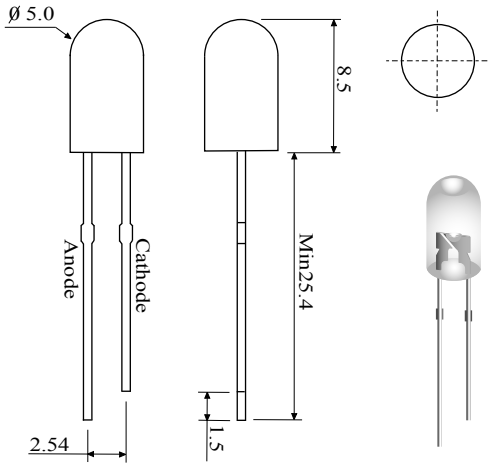

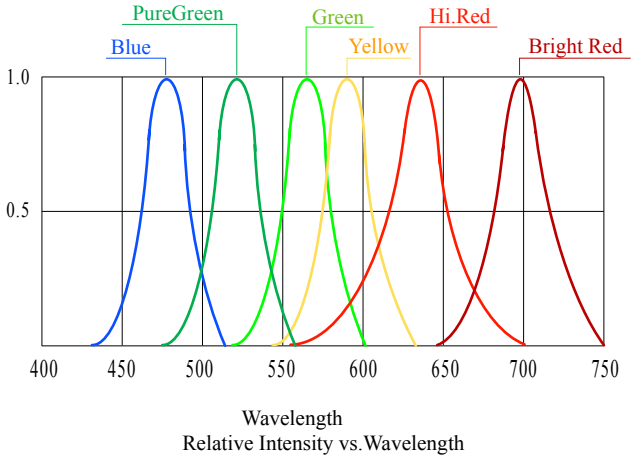

Part no.	Colour	Wave Length	Lens Color (x)	Luminous Intensity (mcd)	Forward Voltage (V)	Forward Current (mA)	0°
LBL051DxI	Red	660		500	2.15	20	25
LBL051CxI	Red	660		1500	2.15	20	25
LBL051AxI-S	Red	623		2500	2.15	20	25
LBL051AxI-U	Red	660		5800	2.15	20	25
LBL051AxI-T	Red	623		7800	2.15	20	25
LBL051KxI	Green	568		500	2.15	20	25
LBL051JxI	Green	568		1500	2.15	20	25
LBL051JxI-S	Green	568		2500	2.15	20	25
LBL051JxI-U	Green	568		6000	2.30	20	25
LBL051IxI	Yellow	589		1300	2.15	20	25
LBL051IxI-S	Yellow	589		2500	2.15	20	25
LBL051IxI-U	Yellow	589		4500	2.15	20	25
LBL051IxI-T	Yellow	589	W- White	7500	2.15	20	25
LBL051FxI	Orange	605	D - Diffused	1500	2.30	20	25
LBL051FxI-S	Orange	605	C - Water Clear	2500	2.30	20	25
LBL051FxI-U	Orange	605	T - Transparent	3500	2.30	20	25
LBL051BGxI	Blue / Green	510		3500	3.60	20	25
LBL051BGxI-U	Blue / Green	510		6500	3.60	20	25
LBL051BLxI	Blue	470		500	3.60	20	25
LBL051BHxI	Blue	470		1600	3.60	20	25
LBL051BUxI	Blue	470		3500	3.60	20	25
LBL051PGxI	Pure Green	525		2500	3.60	20	25
LBL051PGxI-S	Pure Green	525		4000	3.60	20	25
LBL051PGxI-U	Pure Green	525		5500	3.60	20	25
LBL051WHxI	White	----		1300	3.60	20	25
LBL051WUxI	White	----		5200	3.60	20	25