LightBo

3mm Through Hole Lamps

L BL032

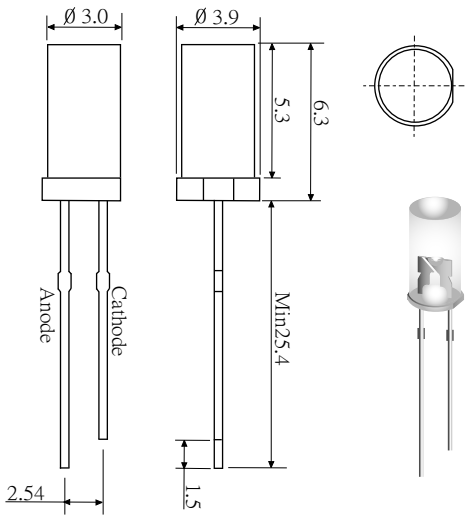

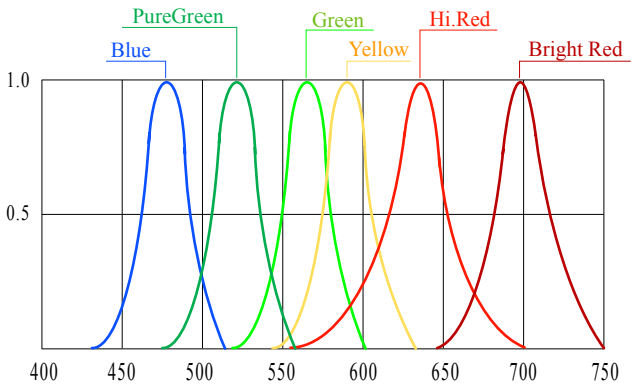

Relative Intensity vs.Wavelength

Part no.	Colour	Wave Length	Lens Color (x)	Luminous Intensity (mcd)	Forward Voltage (V)	Forward Current (mA)	0°
L BL032DxI	Red	632		500	2.15	20	90
L BL032CxI	Red	632		1500	2.15	20	90
L BL032AxI-S	Red	632		2500	2.15	20	90
L BL032AxI-U	Red	632		5800	2.15	20	90
L BL032AxI-T	Red	632		7800	2.15	20	90
L BL032KxI	Green	565		500	2.15	20	90
L BL032JxI	Green	565		1500	2.15	20	90
L BL032JxI-S	Green	565		2500	2.15	20	90
L BL032JxI-U	Green	565		6000	3.60	20	90
L BL032IxI	Yellow	589		1300	2.15	20	90
L BL032IxI-S	Yellow	589		2500	2.15	20	90
L BL032IxI-U	Yellow	589		4500	2.15	20	90
L BL032IxI-T	Yellow	589	W- White	7500	2.15	20	90
L BL032FxI	Orange	621	D - Diffused	1500	2.30	20	90
L BL032FxI-S	Orange	621	C - Water Clear	2500	2.30	20	90
L BL032FxI-U	Orange	621	T - Transparent	3500	2.30	20	90
L BL032BGxI	Blue / Green	503		3500	3.60	20	90
L BL032BGxI-U	Blue / Green	503		6500	3.60	20	90
L BL032BLxI	Blue	470		500	3.60	20	90
L BL032BHxI	Blue	470		1600	3.60	20	90
L BL032BUxI	Blue	470		3500	3.60	20	90
L BL032PGxI	Pure Green	525		2500	3.60	20	90
L BL032PGxI-S	Pure Green	525		4000	3.60	20	90
L BL032PGxI-U	Pure Green	525		5500	3.60	20	90
L BL032WHxI	White	----		1300	3.60	20	90
L BL032WUxI	White	----		5200	3.60	20	90