LightBo

3mm Through Hole Lamps

LBL030

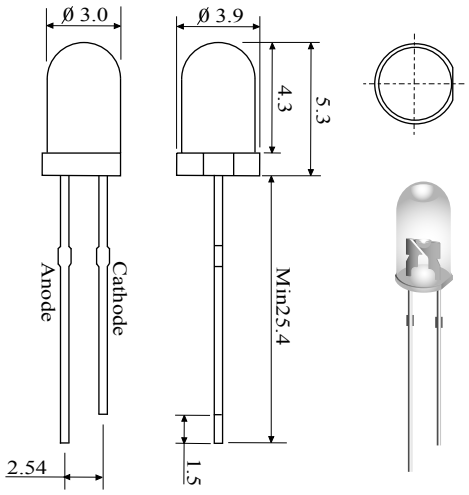

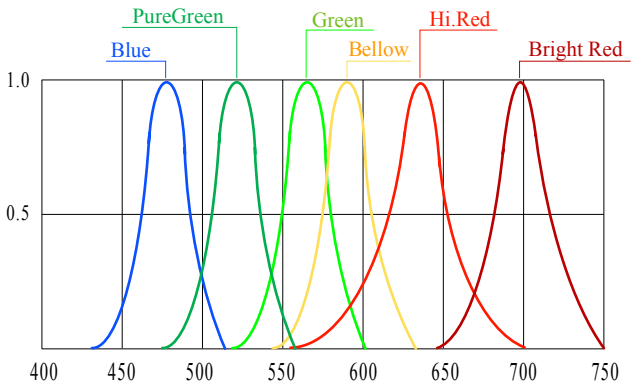

Relative Intensity vs.Wavelength

Part no.	Colour	Wave Length	Lens Color (x)	Luminous Intensity (mcd)	Forward Voltage (V)	Forward Current (mA)	0°
LBL030DxI	Red	632		500	2.15	20	25
LBL030CxI	Red	632		1500	2.15	20	25
LBL030AxI-S	Red	632		2500	2.15	20	25
LBL030AxI-U	Red	632		5800	2.15	20	25
LBL030AxI-T	Red	632		7800	2.15	20	25
LBL030KxI	Green	565		500	2.15	20	25
LBL030JxI	Green	565		1500	2.15	20	25
LBL030JxI-S	Green	565		2500	2.15	20	25
LBL030JxI-U	Green	565		6000	3.60	20	25
LBL030IxI	Yellow	589		1300	2.15	20	25
LBL030IxI-S	Yellow	589		2500	2.15	20	25
LBL030IxI-U	Yellow	589		4500	2.15	20	25
LBL030IxI-T	Yellow	589	W- White	7500	2.15	20	25
LBL030FxI	Orange	621	D - Diffused	1500	2.30	20	25
LBL030FxI-S	Orange	621	C - Water Clear	2500	2.30	20	25
LBL030FxI-U	Orange	621	T - Transparent	3500	2.30	20	25
LBL030BGxI	Blue / Green	503		3500	3.60	20	25
LBL030BGxI-U	Blue / Green	503		6500	3.60	20	25
LBL030BLxI	Blue	470		500	3.60	20	25
LBL030BHxI	Blue	470		1600	3.60	20	25
LBL030BUxI	Blue	470		3500	3.60	20	25
LBL030PGxI	Pure Green	525		2500	3.60	20	25
LBL030PGxI-S	Pure Green	525		4000	3.60	20	25
LBL030PGxI-U	Pure Green	525		5500	3.60	20	25
LBL030WHxI	White	----		1300	3.60	20	25
LBL030WUxI	White	----		5200	3.60	20	25